MAGIC-STAR PLUS

HD14 Series Straight-sided Drawer System
(Super High Drawer: F Height)

DTC
Global Quality Benchmark

PRODUCT

DESCRIPTION

- Concealed, full extension
- Load capacity: 40kg
- Tool free assembly and removal of drawer
- Silent system guarantees smooth run without noise
- 3D adjustment: Up & down adjustment: ±2mm, left & right adjustment:±1.5mm
- tilt adjustment:+0.5mm,-2.5mm
- Finish: Silk white(E29), Grey matt(E30)

SPACE REQUIREMENT

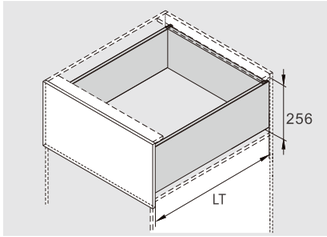

LT=Internal Cabinet Depth
LT=NL+3

SUPER HIGH DRAWER FOR WOOD DRAWER BACK

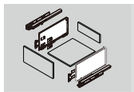

Kit Package

Silk White(E29)! Grey Matt(E30)!

NL	Soft Close item No.	Push-open item No.	Set/ctn
270mm	HD14270A18	HD44270A18	1
300mm	HD14300A18	HD44300A18	1
350mm	HD14350A18	HD44350A18	1
400mm	HD14400A18	HD44400A18	1
450mm	HD14450A18	HD44450A18	1
500mm	HD14500A18	HD44500A18	1
550mm	HD14550A18	HD44550A18	1
600mm	HD14600A18	HD44600A18	1

1

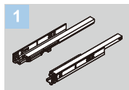

Slides (left/right) /Industrial Package

Pre-zinc Steel(F02)

NL	Soft Close item No.	Push-open item No.	Set/ctn
270mm	HD10270H	HD40270H	5
300mm	HD10300H	HD40300H	5
350mm	HD10350H	HD40350H	5
400mm	HD10400H	HD40400H	5
450mm	HD10450H	HD40450H	5
500mm	HD10500H	HD40500H	5
550mm	HD10550H	HD40550H	5
600mm	HD10600H	HD40600H	5

2

Drawer Sides and Cover Caps (left/right) /Industrial Package

Silk White(E29)! Grey Matt(E30)!

NL	Item No.	Set/ctn
270mm	HE142708	5
300mm	HE143008	5
350mm	HE143508	5
400mm	HE144008	5
450mm	HE144508	5
500mm	HE145008	5
550mm	HE145508	5
600mm	HE146008	5

3

Front Fixing-brackets (left/right) / Industrial Package

Pre-zinc Steel(F02)

	Item No.	Set/ctn
Screw-on	HE13011	120
Press-in	HE13016	120

30

Rod for Push-open Synchronization / Industrial Package
Size:1100mm.Cutting:Internal cabinet width LW-172
for Nominal Side Length: 350mm、400mm、450mm、500mm、550mm、600mm

Item No.	HT0FH02
Set/ctn	60

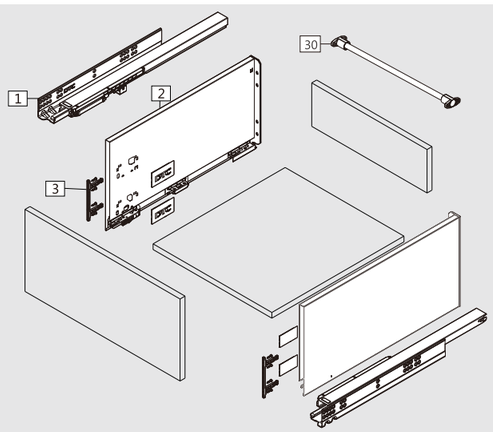

Rod for push-open synchronization not included in the kit

PLANNING

Installation Dimensions(mm)

NL=Nominal Slide Length
LT=Internal Cabinet Depth
LT=NL+3

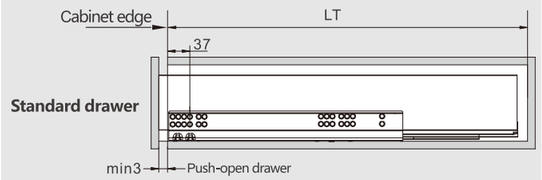

Cabinet Configuration

Cabinet widths/KB(mm)	Soft close drawer Stabilizer	Push-open drawer Synchronization rod
300	–	○
350	–	○
400	–	○
450	–	○
500	–	○
600	–	○
800	○	●
900	○	●
1000	○	●
1200	○	●

– not recommended
○ recommended
● strongly recommended

Screw Positions of the Slides(mm)

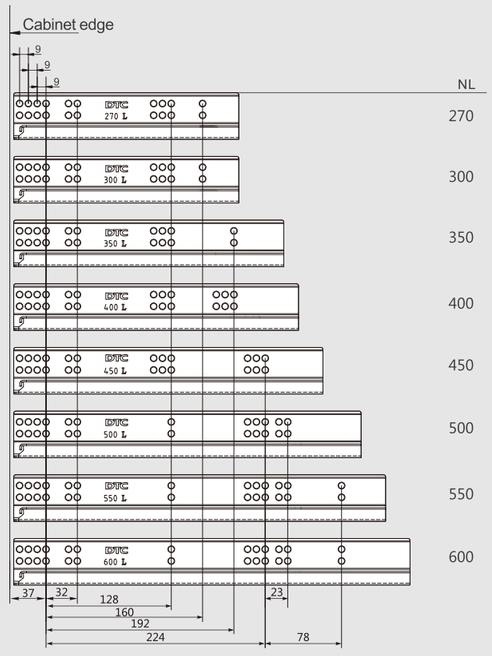

Installation Dimensions(mm)

LW=Internal Cabinet Width

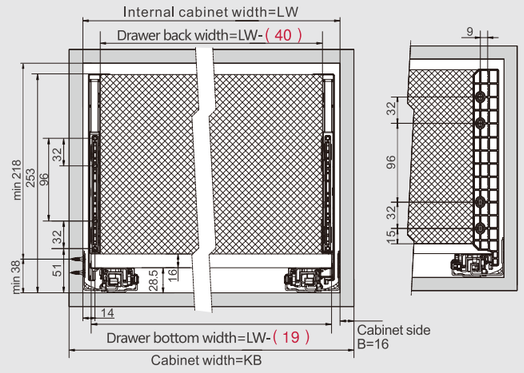

Drawer Front, Back and Bottom Dimensions(mm)

Drawer front

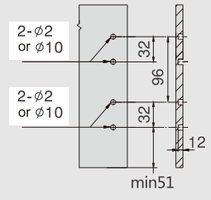

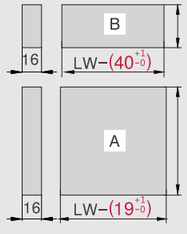

Back
208mm

Bottom
NL−(13) mm

KB Cabinet width
LW Internal cabinet width
NL Nominal length

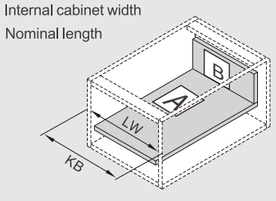

DOUBLE-WALL DRAWER SYSTEMS