BALL BEARING SLIDES

45mm Series Round Profile Overtravel Ball Bearing Slides-Metric Sizes

PRODUCT

DESCRIPTION

- Load capacity:45kg
- Finish:Blue zinc plated(B02),Black(D01)
- Lengths:250-600mm
- Full extension
- Overtravel
- Single way travel

SPACE REQUIREMENT

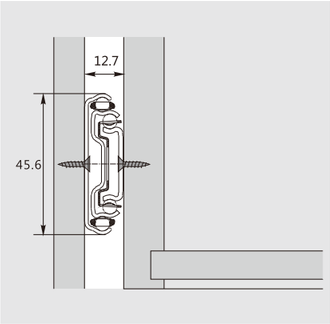

ORDER INFORMATION

Installation

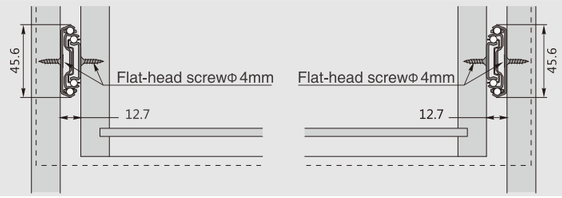

Screw Positions of the Slides(mm)

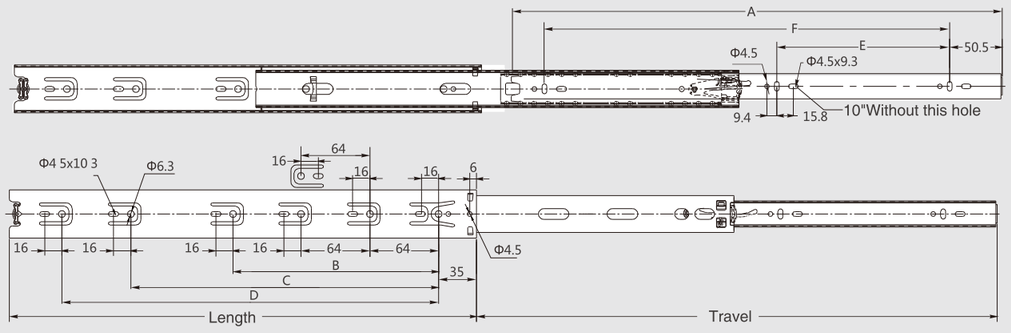

Installation Dimensions(mm)

Item No.	Length NL	Travel	Hole pattern						Set/ctn
			A	B	C	D	E	F	
4587310A	250	272.9	247.2	160			169		12
4587312A	300	324.0	297.2	224			96	224	12
4587314A	350	373.6	347.2	224			128	256	12
4587316A	400	425.2	397.2	224	288		128	320	12
4587318A	450	474.8	447.2	224	352		160	352	12
4587320A	500	524.9	497.2	224	352	416	192	416	12
4587322A	550	574	547.2	224	352	416	224	448	12
4587324A	600	624.1	597.2	224	352	480	224	512	12

BALL BEARING SLIDES

45mm Overtravel Ball Bearing Slides-Metric Sizes

PRODUCT

DESCRIPTION

- Load capacity: 45kg
- Finish: Blue zinc plated(B02), Black(D01)
- Lengths: 250-700mm
- Full extension
- Overtravel
- Single way travel

SPACE REQUIREMENT

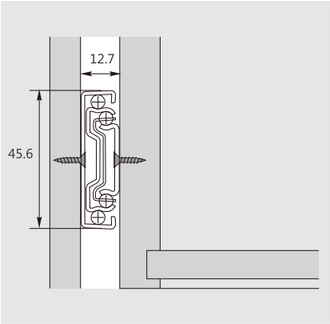

ORDER INFORMATION

Installation

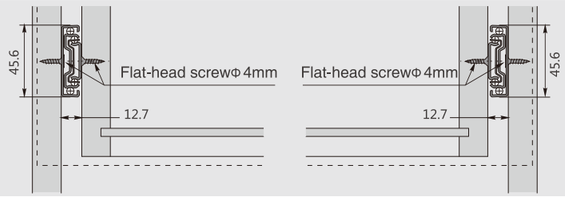

Screw Positions of the Slides(mm)

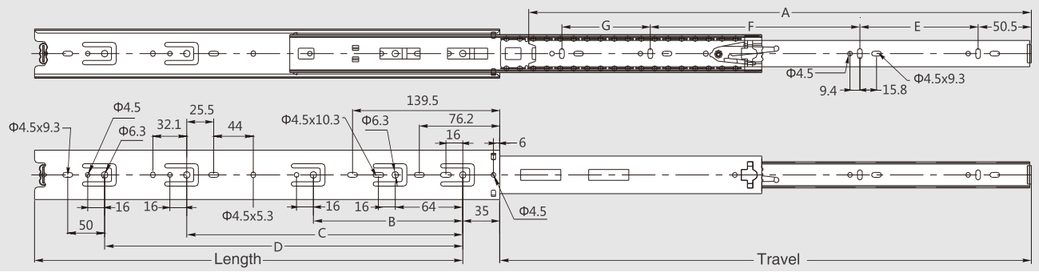

Installation Dimensions(mm)

Item No.	Length NL	Travel	Hole pattern							Set/ctn
			A	B	C	D	E	F	G	
45.73.10-A	250	277.2	247.5	160			169			12
45.73.12-A	300	328.1	297.5	224			96	128		12
45.73.14-A	350	374.2	347.5			224	128	128		12
45.73.16-A	400	425.1	397.5	224		288	128	192		12
45.73.18-A	450	475	447.5	224	352		160	192		12
45.73.20-A	500	525.2	497.5	224	352	416	192	224		12
45.73.22-A	550	574.1	547.5	224	352	416	224	224		12
45.73.24-A	600	625.2	597.5	224	352	480	224	288		12
45.73.26-A	650	675.4	647.5	224	352	544	192	224	160	12
45.73.28-A	700	725.4	697.5	384	512	576	224 192	224	192	12